APPLICATION NOTE

Sensata Technologies

SENSATA SOLUTIONS FOR COMMERCIAL BEVERAGE SYSTEMS

Background

Consumer's tastes in beverages has grown more eclectic over the years. Restaurants and cafes are expected to have the variety necessary to satisfy a plethora of different beverage desires. Furthermore, the prevalence of self-service beverage systems has increased as well. Through automation they need to provide complex drinks to the customer in a consistent fashion. Versatility and automation are not the only factors. Size is also critical. Bar & Kitchen space is at a premium and operators expect their beverage machine to accomplish more in the same or smaller footprint. Lastly, durability is major concern as well. Beverage systems need to withstand the wear and tear of constant commercial usage, as going down during the workday causes disgruntled customers and a loss of business.

The trends in beverage systems are leading to an increase need for better and more efficient sensors and electronics.

Solution

The trends in beverage systems are leading to an increase need for better and more efficient sensors and electronics. Sensata provides many of these components that makes complex beverage systems possible and efficient. Our solutions range from the sensors that monitor temperature of their system to relays that can do the high quantity of switching needed for commercial activity.

Switches & Relays are used to turn various parts of the beverage system on and off during operation. Our relays are contained in small packages that suit the space constraints of beverage systems while also providing precise load control for systems that need exact temperature control.

Pressure Sensors & Switches are critical to the monitoring of beverage systems. Sensata's pressure sensors are used to monitor liquid pressure or regulate mixing of ingredients.

Temperature Sensors & Switches are vital to monitoring temperature sensitive beverage systems. Our temperature switches allow for precise control in wash-down environments.

Position Sensors are important in automated beverage equipment that require metering ingredients before dispensing the drink. Our Hall Effect sensors can be a low-cost position sensor option that are accurate but cost effective.

RECOMMENDED PRODUCTS

Reference on Diagram	Product	Function	Features	Brand
Switches & Relays				
1	EL SERIES	The EL series is a solid state relay that offers solid state switching benefits in a compact package suitable for the space constraints of beverage systems. With no moving parts it has the durability to last in demanding commerical applications.	• 21mm wide package • 10A & 30A @ 24 to 280 VAC • UL & cUL Recognized, CE & RoHS Compliant, TUV certified	Crydom
2	PMP SERIES	The PMP series is a solid state control relay that allows for tighter control of heating systems present in beverage systems. It gives the user the choice between burst fire or phase angle operation modes which allows for more consistent temperature control of heating elements within the system.	• Phase Angle or Burst Fire operation modes • Output ratings of 25, 50 and 90 Amps • Operating voltage ranges of 90-280; 345-530; 420-660 VAC	Crydom
Pressure Sensors & Switches				
3	116CP SERIES	The 116CP is a pressure sensor that is offered in a compact, plastic package. It can be used to monitor the pump outlet pressure or heated water supply pressure of a beverage system. It also has drinking water safe options.	• Drinking water certified options available • Operating pressure range of 0-60 to 0-230 PSI (0-4 to 0-16 (Bar) • Supply voltage of 5 VDC ratiometric or 8-30VDC voltage regulated.	Sensata Technologies
4	60CP SERIES	The 60CP series is a robust pressure sensor that can also monitor pump outlet pressure or heated water pressure but can do so at a higher operating pressure compared to its 116CP counterpart.	• Drinking water certified options available • Operating pressure range of 0-15 to 0-750 PSI (0-1 to 0-50 (Bar) • Supply voltage of 5 VDC ratiometric or 8-30VDC voltage regulated	Sensata Technologies
5	P500/ P528 SERIES	The P500/P528 series is a pressure sensor that can provide one of two solutions for beverage systems. It can monitor inlet and outlet pressure for syrup or CO2 mixing. It can monitor inlet and outlet pressure for syrup or CO2 Mixing.	• Operating pressure range from 0 - 15 up to 0 - 1000 PSI (0-1 to 0-50 Bar) • Output voltage of 0.5 to 4.5 VDC • Minimum life expectancy of 10 million cycles	Sensata Technologies
Temperature				
6	1NT & 3NT SERIES	The 1NT & 3NT thermostats offer runaway thermal protection at any junction critical to beverage applications. Due to the 3NT's IP rating it is especially useful in beverage systems that are in a wash-down environment.	• -40°C to 240°C Temperature Rating • IP67 Rated • ISO9001: 2000 certification	Sensata Technologies
Position Sensors & Encoders				
7	ACW4 SERIES	The ACW4 Hall Effect sensors are used for aspects of the equipment that rely on position. This could be an auger system for dispensing beans in a self-contained espresso machine.	• 0.3% Linearity • Overvoltage, Reverse Polarity, Short Circuit Protection Available • Completely encapsulated electronics	BEI Sensors

AUTOMATED ESPRESSO MACHINE

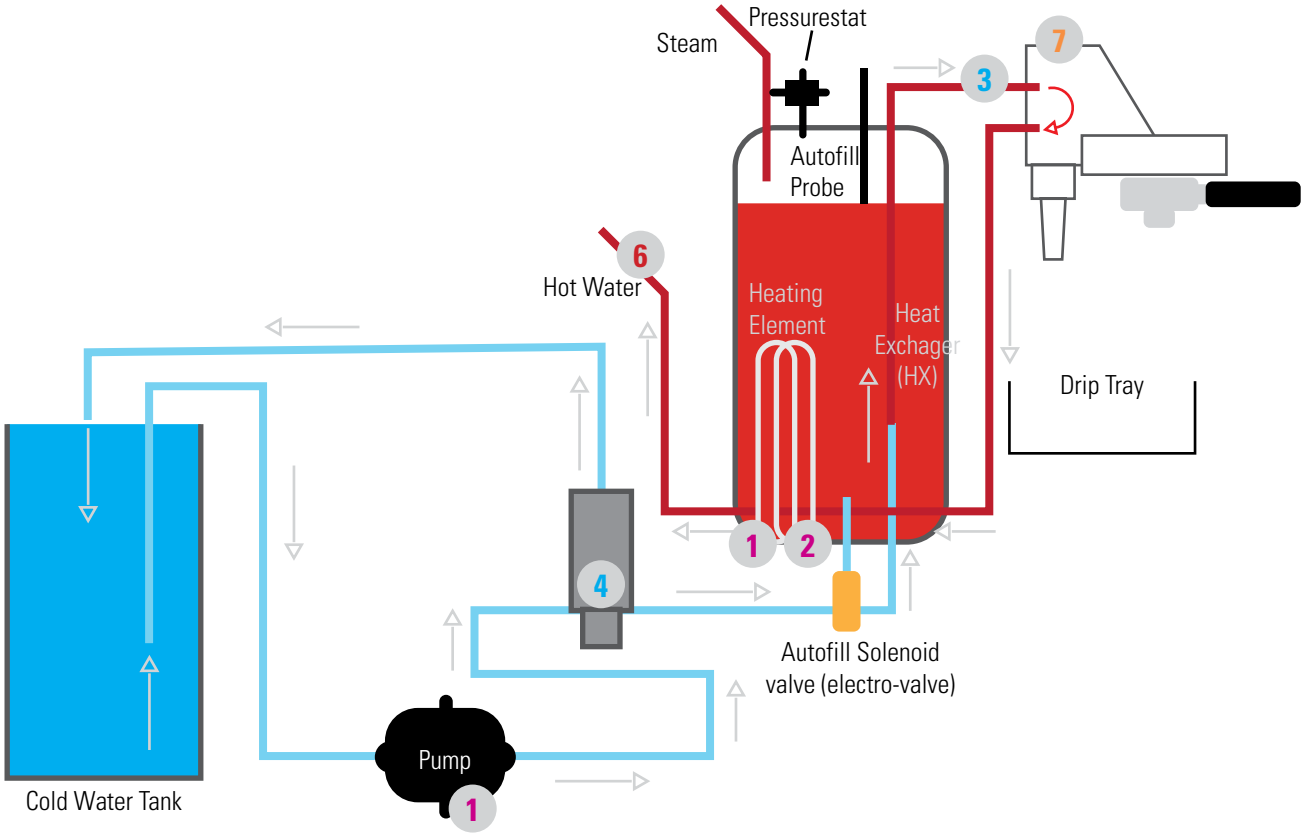

SODA BEVERAGE DISPENSE

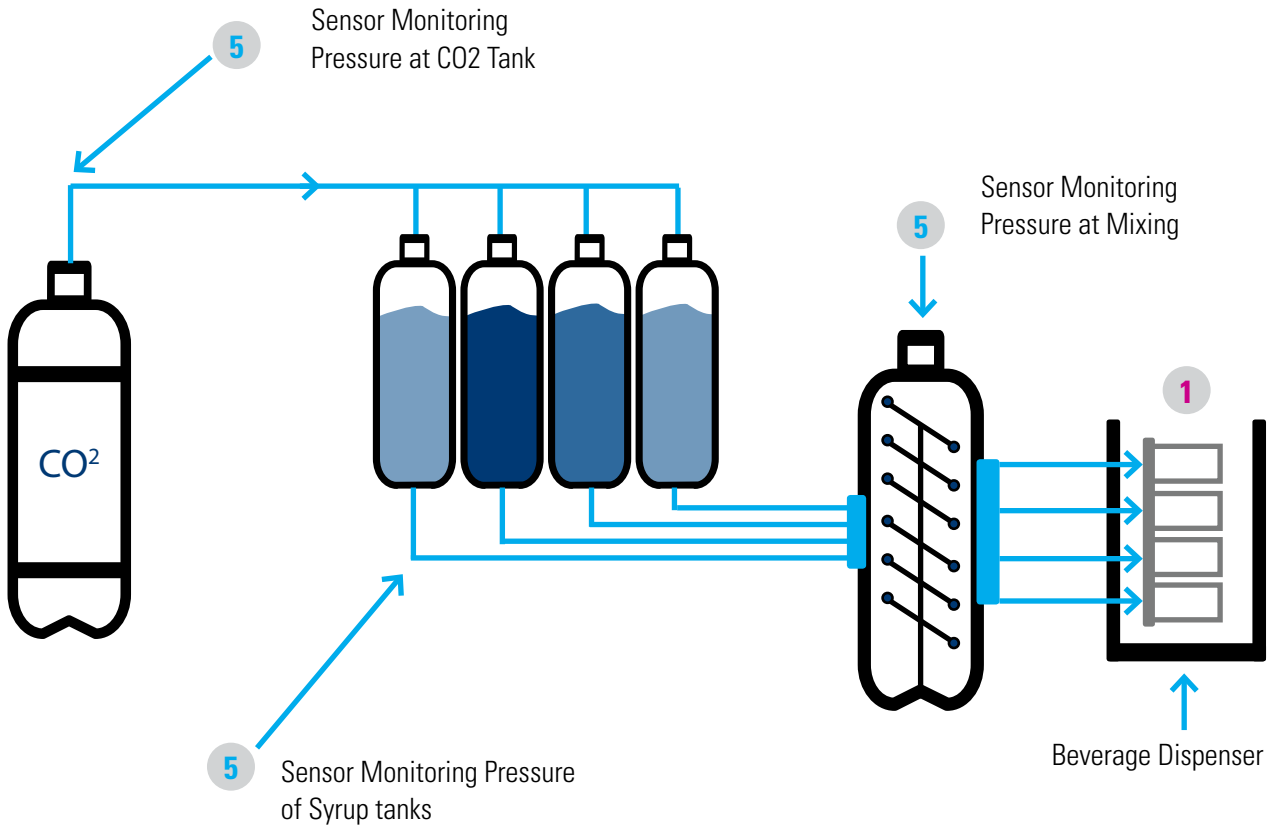

*If a pump is
used to dispense

Sensata Technologies, Inc. ("Sensata") data sheets are solely intended to assist designers ("Buyers") who are developing systems that incorporate Sensata products (also referred to herein as "components"). Buyer understands and agrees that Buyer remains responsible for using its independent analysis, evaluation and judgment in designing Buyer's systems and products. Sensata data sheets have been created using standard laboratory conditions and engineering practices. Sensata has not conducted any testing other than that specifically described in the published documentation for a particular data sheet. Sensata may make corrections, enhancements, improvements and other changes to its data sheets or components without notice.
Buyers are authorized to use Sensata data sheets with the Sensata component(s) identified in each particular data sheet. HOWEVER, NO OTHER LICENSE, EXPRESS OR IMPLIED, BY ESTOPPEL OR OTHERWISE TO ANY OTHER SENSATA INTELLECTUAL PROPERTY RIGHT, AND
NO LICENSE TO ANY THIRD PARTY TECHNOLOGY OR INTELLECTUAL PROPERTY RIGHT, IS GRANTED HEREIN. SENSATA DATA SHEETS ARE PROVIDED "AS IS". SENSATA MAKES NO WARRANTIES OR REPRESENTATIONS WITH REGARD TO THE DATA SHEETS OR USE OF THE DATA SHEETS, EXPRESS, IMPLIED OR STATUTORY, INCLUDING ACCURACY OR COMPLETENESS. SENSATA DISCLAIMS ANY WARRANTY OF TITLE AND ANY IMPLIED WARRANTIES OF MERCHANTABILITY, FITNESS FOR A PARTICULAR PURPOSE, QUIET ENJOYMENT, QUIET POSSESSION, AND NON-INFRINGEMENT OF ANY THIRD PARTY INTELLECTUAL PROPERTY RIGHTS WITH REGARD TO SENSATA DATA SHEETS OR USE THEREOF.
All products are sold subject to Sensata's terms and conditions of sale supplied at www.sensata.com SENSATA ASSUMES NO LIABILITY FOR APPLICATIONS ASSISTANCE OR THE DESIGN OF BUYERS' PRODUCTS. BUYER ACKNOWLEDGES AND AGREES THAT IT IS SOLELY RESPONSIBLE FOR COMPLIANCE WITH ALL LEGAL, REGULATORY AND SAFETY-RELATED REQUIREMENTS CONCERNING ITS PRODUCTS, AND ANY USE OF SENSATA COMPONENTS IN ITS APPLICATIONS, NOTWITHSTANDING ANY APPLICATIONS-RELATED INFORMATION OR SUPPORT THAT MAY BE PROVIDED BY SENSATA.
Mailing Address: Sensata Technologies, Inc., 529 Pleasant Street, Attleboro, MA 02703, USA.

CONTACT US

Americas
Pressure Sensors and Switches
+1 (800) 350 2727
sensors@sensata.com
switches@sensata.com
Temperature Sensors
+1 (888) 438 2214
sensors@sensata.com
Switches & Relays
+1 (877) 502 5500 – Option 2
sales.crydom@sensata.com
Position Sensors & Encoders
+1 (800) 350 2727 – Option 1
sales.beisensors@sensata.com
Europe, Middle East & Africa
Pressure Sensors and Switches
+359 (2) 809 1826
pressure-info.eu@sensata.com
Temperature Sensors
+31 (74) 357 8156 (Klixon+Airpax)
temperature-info.eu@sensata.com
Switches & Relays
+44 (1202) 416170
ssr-info.eu@sensata.com
Position Sensors & Encoders
+33 (3) 88 20 8080
position-info.eu@sensata.com
Asia Pacific
sales.isasia@list.sensata.com
China +86 (21) 2306 1500
Japan +81 (45) 277 7117
Korea +82 (31) 601 2004
India +91 (80) 67920890
Rest of Asia +886 (2) 27602006 ext 2808

Copyright © 2019 Sensata Technologies, Inc.